Migali® 1955

COMPETITOR SERIES®

PROJECT: _____
LOCATION: _____
ITEM#: _____
QUANTITY: _____

REACH-IN REFRIGERATORS

- Beautiful ergonomic construction & rounded corners
- Digital temperature controller & read-out
- All stainless steel exterior and interior
- Forced air refrigeration system
- Recessed door handles
- Incandescent interior lighting
- Door locks
- 90 degree hold open door feature for loading products
- Migali® Protection Plan: 1 Year Parts & Labor Warranty, 5 Years Compressor Warranty
- Top mount compressor for enhanced efficiency
- Pre-installed casters and shelving
- Auto-defrost

MODEL	DOORS	Cu/Ft	SHELVES	H/P	AMPS	VOLTAGE	WEIGHT(lbs)	ENERGY CONSUMPTION Kwh/24hr	PLUG TYPE	DIMENSIONS L x D x H	TEMPERATURE RANGE
C-1R	1	23	3	1/4	3.5	115/60/1	254 lbs.	4	Nema 5-15P	28.7" x 33.2" x 83.8"	+33° F (-) +41° F
C-2R	2	49	6	1/3	5.6	115/60/1	419 lbs.	5.5	Nema 5-15P	51.7" x 33.2" x 83.8"	+33° F (-) +41° F
C-3R	3	72	9	1/2	7.6	115/60/1	617 lbs.	3.4	Nema 5-15P	77.8" x 33.2" x 83.8"	+33° F (-) +41° F

* MIGALI® RESERVES THE RIGHT TO CHANGE SPECIFICATIONS WITHOUT NOTICE

* TOTAL HEIGHT INCLUDES CASTERS

TOLL FREE: 800.852.5292
WEB: www.migali.com

American Family Owned SINCE 1955

Conforms to NSF 7 Foodservice

ENERGY STAR PARTNER

MIGALI® REMAINS AN AMERICAN FAMILY COMPANY SINCE 1955

DIMENSIONAL DRAWINGS

C-1R

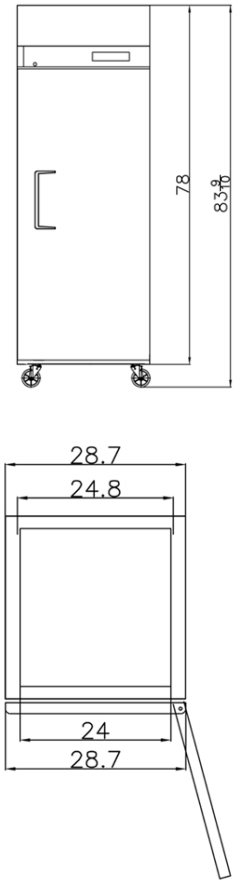

C-2R

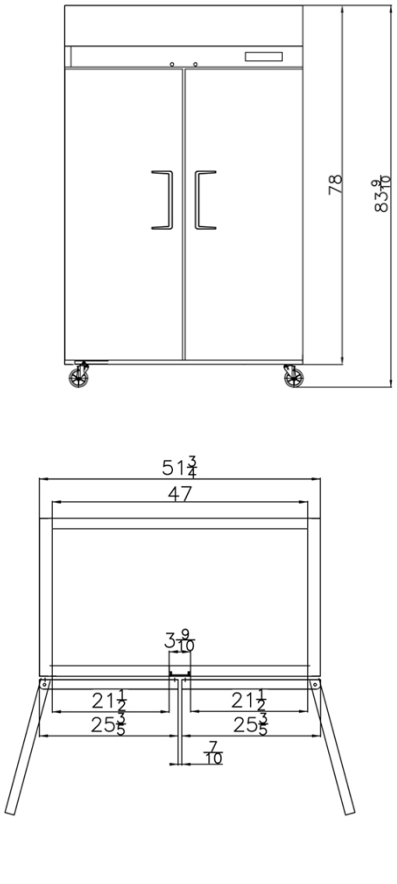

C-3R

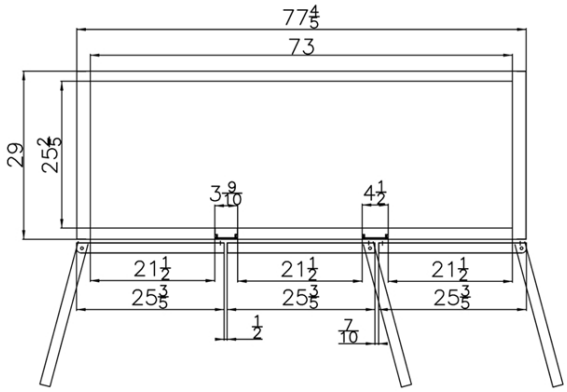

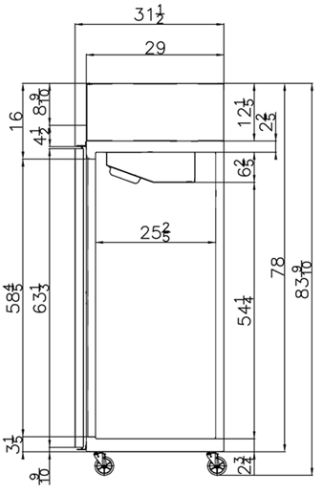

SIDE VIEW (1,2,3) DOOR MODELS

TOLL FREE: 800.852.5292
FAX: 856.963.3604
EMAIL: contact@migali.com
WEB: www.migali.com